Built in Electric Fan Oven

LAM3400
LAM3402
LAM3403

User & Installation Guide

LAMONA
Exclusive to Howdens Joinery Co.

Downloaded from www.Manualslib.com manuals search engine

Dear Customer,
Congratulations on your choice of oven which has been designed to give you excellent service.

The user manual will help you use your product quickly and safely.

- Please read this user manual before installing and using the oven.
- Always follow the safety instructions.
- Keep this user manual within easy reach for future reference.
- Please read any other documents supplied with the product.

Explanation of symbols
Throughout this user manual the following symbols are used:

Important information or useful tips about usage.

Warning for possible hazards to health and property

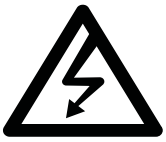

Warning possibility of electric shock.

This appliance is marked according to the European directive 2012/19/EU on Waste Electrical and Electronic Equipment (WEEE). WEEE contains both polluting substances (which can cause negative consequences for the environment) and basic components (which can be re-used). It is important to have WEEE subjected to specific treatments, in order to remove and dispose properly all pollutants, and recover and recycle all materials.
Individuals can play an important role in ensuring that WEEE does not become an environmental issue; it is essential to follow some basic rules:

- WEEE shall not be treated as household waste.
- WEEE shall be handed over to the relevant collection points managed by the municipality or by registered companies.
- WEEE can be recycled free of charge

Downloaded from www.Manualslib.com manuals search engine

Index

01 - Before using the oven **05**
Important safety information 05
General 06
Safety for children 07
Safety when working with electricity 07

02 - General information **08**
Oven layout 08
Control panel layout 08
Accessories 08

03 - Preparation **09**
Initial use 09
First cleaning of the appliance 09
Initial heating 09
Tips for energy saving 09

04 Operation modes **10**
Operating modes 10

05 How to operate the oven and grill **11**
Select a temperature and operating mode 11
How to use the oven/grill 11
Shelf positions 11
Switch off the oven/grill 11

06 - How to operate the timer **12**
How to operate the oven timer 12
Switch on fully automatic operation 12
Switch on semi-automatic operation 12
Interrupting the cooking process 13
How to activate the program lock 13
Deactivate the program lock 13
How to use the minute minder 13
Switching off the alarm 13

07 - Cooking and baking advice **14**

08 - Cooking tables **15**

09 - Care and maintenance **16**
General information 16
Cleaning the control panel 16
Cleaning the door 16
Removal of the oven door 17
Removing the inner door glass 18
Replacing the oven Lamp 19

10 - Installation **20**
Before installation 20
Installation and connection 21
Connection to mains supply 22
Cooling Fan 22

11 - Technical specification **23**

12 - Troubleshooting **24**

13 - Your Guarantee **25**

Downloaded from www.Manualslib.com manuals search engine

Important instructions and warnings for safety and environment

- This appliance can be used by children aged from 8 years and above and persons with reduced physical, sensory or mental capabilities or lack of experience and knowledge if they have been given supervision or instruction concerning use of the appliance in a safe way and understand the hazards involved.
- Children shall not play with the appliance. Cleaning and user maintenance shall not be made by children without supervision
- The appliance and its accessible parts become hot during use. Care should be taken to avoid touching heating elements. Children less than 8 years of age shall be kept away unless continuously supervised.
- Do not use steam cleaners to clean the appliance as this may cause an electric shock.
- Only use the connection cable specified in the “Techincal specifications”.
- If the power connection cable for the product is damaged, it must be replaced by the manufacturer, its service agent or similary qualifed persons in order to avoid a hazard.
- During use the appliance becomes hot. Care should be taken to avoid touching heating elements inside the oven.
- The appliance must be installed so that it can be completly disconnected from the network. The separation must be provided either by a mains plug, or a switch built into the fixed electrical installation, according to construction regulations.
- Accessible parts may become hot during use. Young children should be kept away.

Downloaded from www.Manualslib.com manuals search engine

Important instructions and warnings for safety and environment

- Do not use harsh abrasive cleaners or sharp metal scrapers to clean the oven door glass since they can scratch the surface, which may result in shattering of the glass.
- Rear surface of the oven gets hot when it is in use. Make sure that the gas/electrical connection does not contact the rear surface; otherwise, connections can get damaged.
- Ensure that the appliance is switched off before replacing the lamp to avoid the possibility of electric shock.

Downloaded from www.Manualslib.com manuals search engine

Before using the Oven

- Make sure that you have removed all packaging, wrappings, stickers and films from the oven's surface.

- It is recommended that you clean and wash the oven's surface before using for the first time.

This appliance is for domestic cooking purposes only. It must not be used for other purposes, for example room heating, or drying towels and dish cloths. Commercial use will void the guarantee.

The manufacturer shall not be liable for any damage caused by improper use or handling errors.

General

This product is not intended to be used by persons with physical, sensory or mental disorders or unlearned or inexperienced people (including children) unless they are supervised by a person who will be responsible for their safety or who will instruct them accordingly in the use of the product. Children must be supervised to prevent them from tampering with the product.

- Connect the product to an earthed outlet protected by a fuse of suitable capacity as stated in the "Technical specifications" table. Our company shall not be liable for any problems arising due to the product not being earthed in accordance with the local regulations.

- Do not operate the product if the power cable is damaged. Call qualified service agent.

- Do not operate the product if it is defective or has any visible damage.

- Do not carry out any repairs or modifications on the product. However, you may remedy issues that do not require any repairs or modifications. See Troubleshooting, later in this booklet

- Never wash down the product with excessive water, as there is the risk of electric shock!

- Never use the product when your judgment or coordination is impaired by the use of alcohol and/or drugs.

- Product must be disconnected from the mains during installation, maintenance, cleaning and repair procedures.

- Repair procedures must always be performed by qualified service agents. The manufacturer shall not be held responsible for damages arising from procedures carried out by unauthorised persons, which may also void the guarantee.

- Be careful when using alcoholic drinks in your dishes. Alcohol evaporates at high temperatures and may cause fire since it can ignite when it comes into contact with hot surfaces.

- Do not heat closed tins and glass jars in the oven. The pressure that would build-up in the tin/jar may cause it to burst.

- Do not place any flammable materials close to the product as the sides may become hot during use.

- **WARNING FIRE RISK -**
  Do not place aluminium foil, baking trays or cook on the base of this oven, doing so will cause permanent damage to your appliance and cabinetry with the potential risk of fire .

- Do not place aluminium foil on the base of the baking tray.

- Keep all ventilation slots clear of obstructions, as this may cause premature failure of the oven element.

- Parts of the appliance may become hot during or immediately after use. Care should be taken to avoid touching the heating elements,

Downloaded from www.Manualslib.com manuals search engine

and components inside the oven which maybe hot. Always allow sufficient time for the oven to cool.

- Do not allow the oven to cool with the door open. Even if the appliances door is only open a little, front panels of adjacent units could become damaged over time.
- If the door seal is very dirty this can prevent the door from closing properly during use, resulting in possible damage to adjacent furniture and poor efficiency. Always ensure the door seal is clean.
- Product may become hot when it is in use. Please be careful not to touch these hot surfaces.
- Always use heat resistant oven gloves when putting dishes in or removing dishes from the hot oven.
- Do not use the product if any door glass is removed or damaged.
- Rear surface of the oven may get hot when it is in use. Make sure that the electrical connections do not contact the rear surface; otherwise, connections may be damaged.
- Do not trap the mains cable and do not route it over hot surfaces. The cable insulation may melt and cause a fire as a result of a short circuit.
- Make sure that the product function knobs are switched off after every use.
- When hot and cold air meet, condensation can form. The outer door is air cooled and the inner glass will become hot during cooking, therefore some condensation might form. This is perfectly normal. All condensation will disappear as the oven reaches cooking temperature.
- Product must be installed by a qualified person in accordance with the regulations in force. Otherwise, the guarantee may become void.

Safety for children

Electrical products can be dangerous to children. Keep children away from the product when it is operating and do not allow them to play with or near the product.

“CAUTION: accessible parts of the oven may become hot when the oven or grill is in use. Children should be kept away until the product has cooled down.”
Do not store any items above the appliance that children may reach for.

When the door is open, do not load any heavy object on it and do not allow children to sit on it. The door or door hinges may be damaged.
The packaging materials will be dangerous for children. Keep the packaging materials away from children. Please dispose of all parts of the packaging according to environmental standards.

Safety when working with electricity

Any work on electrical equipment and systems should only be carried out by authorised and qualified persons.

In case of any damage, switch off the product and disconnect it from the mains. To do this, turn off the fuse at the fuse box.

Make sure that fuse rating is compatible with the product.

Do not switch the oven off at the mains isolation switch immediately after cooking. Cooling fan continues to run for up to 20-30 minutes (approx) even after the oven control is turned off.

Downloaded from www.Manualslib.com manuals search engine

02 - General Information

Oven layout

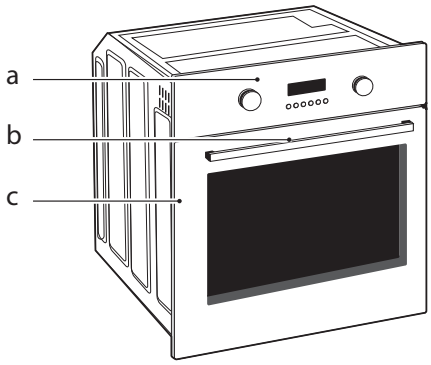

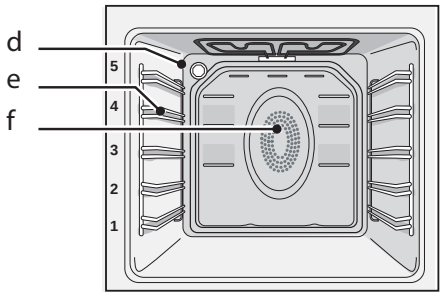

a.	Control panel	d.	Oven light
b.	Handle	e.	Oven shelf runners
c.	Oven door	f.	Fan motor (behind steel plate)

Control panel layout

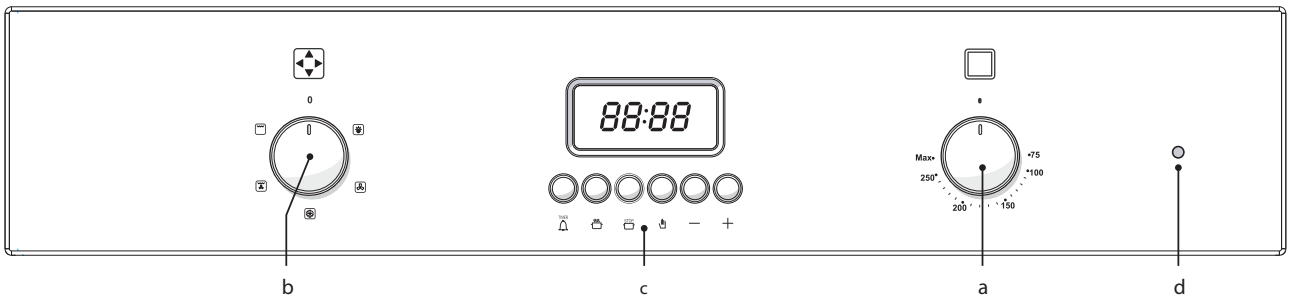

a.	Main oven thermostat knob	c.	Digital timer
b.	Main oven function knob	d.	Oven / grill temperature indicator

Accessories

Oven tray / grill pan

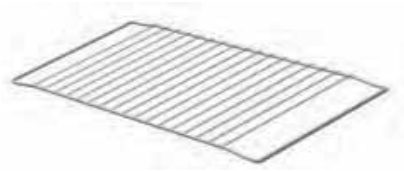

Grill pan wire rack / trivet

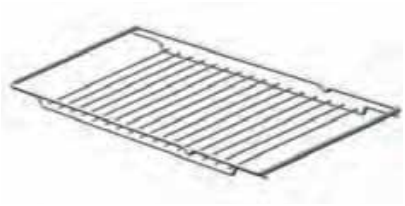

Oven shelf

Downloaded from www.Manualslib.com manuals search engine

03 - Preparation

Initial use

Before using the oven the clock time must be set. If the clock time is not set, the main oven will not work.

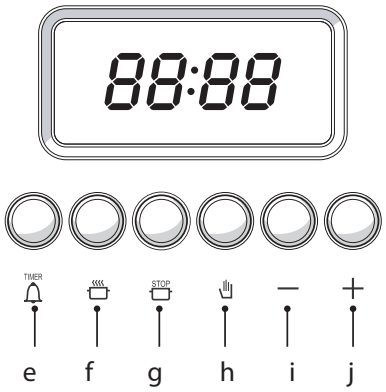

Buttons for:

e. Alarm clock / minute minder
f. Cooking time
g. End of cooking time
h. Switch on/off automatic mode

Buttons for time adjustment:

i. Minus Button
j. Plus Button

1. To set the time of day, press and hold buttons ‘ ’ and ‘ ’
2. Whilst continuing to hold the buttons, set the time of day by pressing the ‘+’ or ‘—’ button. The clock will increase or decrease in one minute increments. If you press and hold the ‘+’ or ‘—’ buttons for 3 seconds the time will advance quickly
3. Once a time is set release all buttons

First cleaning of the appliance

1. Remove all packaging materials.
2. Wipe the surfaces of the appliance with a damp cloth or sponge and dry with a clean cloth

The surface may get damaged by some detergents or cleaning materials.

Do not use aggressive detergents, cleaning powder/ cream or any sharp objects.

Initial heating

It is recommended to heat up the product for about 30 minutes and then switch it off. Thus any production residues or layers will be burnt off and removed.

1. Take the tray and the wire grid out of the oven.
2. Close the oven doors.
3. Select Fan and Grill cooking
4. Select the highest oven & grill power levels; See How to use the electric oven, pages 8-11.
5. Operate oven & grill for about 30 minutes.
6. Turn off your oven & grill and allow to cool.

Small amounts of smoke and fumes may emit during the initial heating process; this is normal, however monitor the oven at all times and ensure that the room is well ventilated.

Tips for saving energy

The following information will help you to use your appliance in an ecological way, and to save energy:

- Use dark coloured or enamel coated cookware in the oven as the heat transmission will be better.
- Perform a preheating operation if it is advised in the user manual or cooking instructions.
- Do not open the door of the oven frequently during cooking.
- Try to cook more than one dish in the oven at the same time whenever possible. You can place two cooking vessels onto the wire shelf.
- Cook one dish after another. The oven will already be hot.
- You can save energy by switching off your oven a few minutes before the end of the cooking time. Do not open the oven door.
- Defrost frozen dishes before cooking them if possible.

Downloaded from www.Manualslib.com manuals search engine

04 - Operating modes

Operating modes

All functions for the ovens and grill are listed in this section.
The order of operating modes shown here might deviate from the arrangement on your appliance.

Oven Light

This operates the oven internal light only, No heat will be generated, The outside cooling fan may also operate.

Defrost

The oven is not heated. Only the fan (in the rear wall) is in operation. Frozen granular food can be thawed slowly at room temperature, and cooked food can be cooled down.

Fan Cooking

The element & fan (in the rear wall) are both in operation. Hot air is distributed evenly and quickly all over the cavity by the fan. In most cases, preheating is not required. This mode is suitable when several levels are used for the cooking and an even temperature is required throughout the oven cavity .

Fan-Grill

The grill effect is not as strong as with the full grill and heat is distributed more evenly.

Ensure correct shelf position is used, set the temperature to maximum level, and turn the food as required to ensure even cooking. time.

Grill -Full

The full grill element in the top oven is in operation. This is suitable for grilling larger dishes

Ensure correct shelf position is used, set the temperature to desired level, and turn the food as required to ensure even cooking.

Downloaded from www.Manualslib.com manuals search engine

05 - How to operate the oven and grill

Select temperature & Operating mode

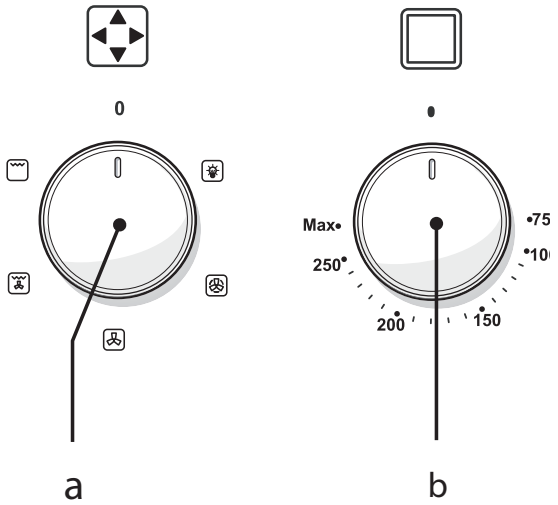

a. Oven function knob
b. Oven thermostat knob

The operating modes of the electric oven are selected with the function knob. The temperature is adjusted with the thermostat knob.

How to use the oven

1. Set thermostat knob to the desired temperature.
2. Set function knob to the required operating mode.
3. Close the oven door

The oven heats up to the adjusted temperature and maintains it. During heating, the temperature indicator light will remain on until the desired temperature is reached.

How to use the grill

1. Set the function knob to fan or fan grill symbol.
2. Set grill temperature.
3. Close the oven door
4. Preheat for approximately 5 minutes, if it is necessary.

The grill heats up to the adjusted temperature and maintains it. During heating, the temperature indicator light will remain on until the desired temperature is reached.

Hot surfaces may cause burns! Close oven door during grilling.

Shelf positions

The oven has 5 shelf positions as illustrated below, It is important to position the wire shelf into the runners correctly.

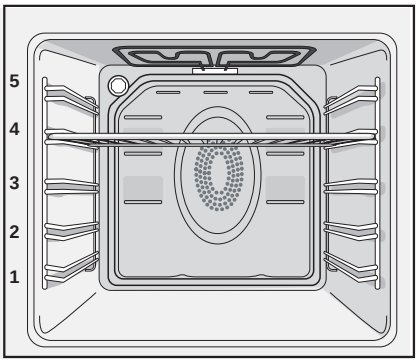

Please ensure shelves are fully inserted before closing the oven door, failure to do so could lead to damage to the door.

Warning -Do not place aluminium foil or baking trays on the base of the oven or grill pan. This can lead to permanent damage to your appliance.

Warning –Do not place plates, dishes or trays on the floor of oven cavity when oven is in use.

Warning - Do not use the oven cavity for storage when not in use.

Switch off the electric oven/grill

Turn function knob and thermostat knob to off position (top).

Downloaded from www.Manualslib.com manuals search engine

06 - How to operate the Timer

How to operate the oven timer

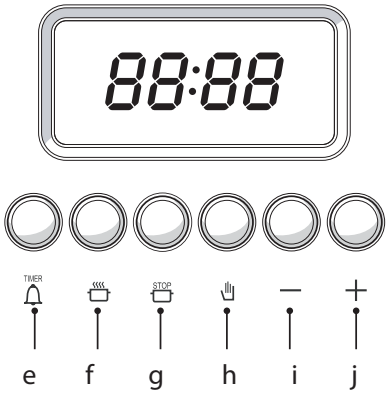

Buttons for:

e. Alarm clock / muinet minder
f. Cooking time
g. End of cooking time
h. Switch on/off automatic mode

Buttons for time adjustment:

i. Minus Button
j. Plus Button

The maximum time to be set for the end of the cooking process is 23 hours and 59 minutes. In the case of a power cut, the program will be cancelled and reprogramming is needed.

Switch on fully automatic operation

In this mode of operation, you can define when the oven is to switch on/off automatically.

First, define the end time:

1. Keep button ‘STOP’ pressed.
2. Set the desired end of cooking time with button ‘+’ or ‘—’. The clock will increase or decrease in one minute increments. If you press and hold button ‘ +’ or ‘—’ for 3 seconds the time will advance quickly.

(The indication “AUTO” will light up on the display.)

3. Once desired end time is reached, release the ‘STOP’ button.

Next define the length of cooking time:

4. Keep button ‘’ pressed.
5. Set the desired length of the cooking time with button ‘—’ or ‘+’. The clock will increase or decrease in one minute increments. If you press and hold button ‘ —’ or ‘+’ for 3 seconds the time will advance quickly.
6. Once the desired cooking time is programmed release the ‘’ button.
7. Put your dish into the oven.
8. Select the required operating mode and temperature.

The oven will switch on for the defined length of cooking time prior to specified end time. During the cooking process, the cooking symbol () on the display is lit.

9. Once the cooking process has been completed and an alarm will sound and heating of the oven will stop.

(The indication “AUTO” on the display goes off.)

10. Switch the oven off by rotating the thermostat and/or the function knob to the off position (top).

Switch on semi-automatic operation

In this mode of operation, you can define when the oven is to switch off automatically

1. Keep button ‘STOP’ pressed to define the finish time or ‘’ to define the length of cooking.
2. Set the desired time with the ‘+’ or ‘—’ buttons. The time will increase or decrease in one minute increments. If you press and hold button ‘ —’ or ‘+’ for 3 seconds the time will advance quickly.
3. Once desired time is reached, release the ‘STOP’ or ‘’ button.

The indication will “AUTO” light up on the display.

4. Put your dish into the oven.
5. Select operating mode and temperature.

Downloaded from www.Manualslib.com manuals search engine

The oven is heated up to the set temperature and keeps this temperature until the end of the cooking time that has been selected. During the cooking process, the cooking symbol on the display ( ) is lit.

6. Once the cooking process has been completed and an alarm will sound and heating of the oven will stop.
7. Switch the oven off with the thermostat knob and/or the function knob.
8. Finally press the ' ' button to switch off the automatic mode .

The indication "AUTO" on the display goes off.

If you press button ' ' during the cooking process, the display will show the remaining cooking time for a short moment.

Interrupting the cooking process

1. Keep button ' ' pressed.
2. Keep button '—' pressed until "0.00" is shown as remaining cooking time on the display.
3. Release button both buttons.
4. Finally press the ' ' button to switch off the automatic mode .

» The indication "AUTO" on the display goes off.

5. Switch the oven off by rotating the thermostat and/or the function knob to the off position (top).

How to Activate the program lock

1. Keep buttons' ' and ' ' pressed simultaneously for 8 seconds until ".On" appears on the display
2. Press button '+'.

The display will show ".oF" for 3 seconds and a key symbol will appear.

(The oven timer is now locked.)

Deactivate the program lock

1. Keep buttons' ' and ' ' pressed simultaneously for 8 seconds until ".oF" appears on the display
2. Press button '+'.

The display will now show ".oN" for 3 seconds. (Now the oven timer can be used again.)

How to use the minute minder

In addition to using the timer for cooking, it can be also used as a minute minder / alarm.
As soon as the defined period of time has expired, the alarm will signal. The minute minder has no influence on the functions of the oven.

Setting the minute minder

1. Keep button ' 'pressed.

2. Set the desired time with the '+' or '—' buttons. The time will increase or decrease in one minute increments. If you press and hold button '+' or '—' for 3 seconds the time will advance quickly.

The alarm clock symbol on the display lights up.

3. Release ' 'button.

When you press the ' ' button while the timer is activated, the display will show the remaining time for a brief moment.

Switching off the alarm

1. Press button ' ' to silence the alarm sound.

The timer symbol on the display will disappear

In order to cancel the minute minder

1. Keep button ' ' pressed.
2. Simultaneously press the'—' until until "0.00" is shown as remaining time on the display.
3. Release button all the buttons.

The timer symbol on the display will disappear

Downloaded from www.Manualslib.com manuals search engine

07 - Cooking and baking advice

Risk of scalding by hot steam! Take care when opening the oven door as steam may escape.

Tips for baking

- Use nonstick coated appropriate metal trays and containers or heat-resistant silicone moulds.
- Make best use of the space on the shelf.
- It is recommended to place the vessels in the middle of the shelf.
- Select the correct shelf position before turning the oven or grill on - don't move oven shelves when hot.
- Keep the oven door closed.

Tips for roasting

- Seasoning with lemon juice and black pepper will improve the cooking performance when cooking a whole chicken, turkey or a large piece of meat.
- Meat with bones takes about 15 to 30 minutes longer to cook than a roast of the same size without bones.
- Let meat rest in the oven for about 10 minutes after the cooking time. The juices will be better distributed throughout the meat and will not run out when the meat is cut.
- Fish in a heat proof dish should be placed at the medium or lower level.

Tips for grilling

- Grilling is ideal for cooking meat, fish and poultry and will achieve nice browning without drying out the food. Flat pieces, meat skewers and sausages are particularly suited for grilling, as are vegetables with a high water content, such as tomatoes and onions.
- Distribute the pieces to be grilled on the wire rack.
- Use tray or grill pan under the wire rack in order to collect dripping fat or juices.
- Adding some water to the grill pan will assist with cleaning.

Tips for baking cake

- If the cake is too dry, increase the temperature by 10 °C and decrease the cooking time.
- If the cake is wet, use less liquid or lower the temperature by 10 °C.
- If the cake is too dark on top, place it on a lower shelf, lower the temperature and increase the cooking time.
- If cooked well on the inside but sticky on the outside use less liquid, lower the temperature and increase the cooking time.

Tips for baking pastry

- If the pastry is too dry, increase the temperature by 10 °C and decrease the cooking time. Dampen the layers of pastry with a wash composed of milk, oil, egg.
- If the pastry takes too long to bake, pay attention that the thickness of the pastry you have prepared
- If the upper side of the pastry gets browned, but the lower part is not cooked, make sure that the amount of wash you have used for the pastry is not too much at the bottom of the pastry. Try to spread the wash equally over the pastry for an even browning.
- Cook the pastry in accordance with the mode and temperature given in the cooking table. If the bottom part is still not browned enough, place it on one lower shelf next time.

Tips for cooking vegetables

- If the vegetable dish runs out of juice and gets too dry, cook it in a dish with a lid instead of an open tray. Closed vessels will preserve the juice of the dish.
- If a vegetable dish is not cooked, boil the vegetables beforehand.

Downloaded from www.Manualslib.com manuals search engine

08 - Cooking Table

The values indicated in the tables below are indicative. They may vary according to the type of food as well as your preferences of cooking.

Baking and roasting
Level 1 is the bottom level in the oven.

MAIN OVEN COOKING TABLE				
Dish	Cooking level	Oven Function	Temperature °C	Cooking Time min
Baking				
Cakes in tray*	1 Level		175	30 - 40
	2 Levels		175	45 - 50
Cakes in mould*	1 Level		175	50 - 60
Cakes in bun cases	1 Level		175	25 - 35
	2 levels		175	35 - 45
	3 levels		180	45 - 55
Sponge cake*	1 level		200	15 - 20
Cookies*	1 Level		175	25 - 30
	2 levels		170 ... 190	35 - 45
	3 levels		175	30 - 40
Dough pastry*	1 Level		200	35 - 45
	2 levels		200	50 - 60
	3 levels		200	55 - 65
Rich pastry*	1 Level		200	25 - 35
	2 levels		200	35 - 45
	3 levels		190	45 - 55
Meat				
Lasagne*	1 level		200	30 - 40
Roast Beef	1 level		25 min at 230/max then 180 ... 190	100 - 120
Leg of Lamb	1 level		25 min at 220 then 180 ... 190	70 - 90
Roasted chicken	1 level		25 min at 230/max then 180 ... 190	55 - 65
Turkey (5.5kg)	1 level		15 min at 230/max then 190	150 - 210
Fish				
Fish	1 level		200	20 - 30

When cooking with 2 trays at the same time, place the deeper tray on the upper rack and the other one on the lower rack.
* It is suggested to perform preheating for all foods

If cooking requires preheating, heat the oven until the thermostat lamp goes out.

Downloaded from www.Manualslib.com manuals search engine

09 - Care and maintenance

General information

Service life of the product will extend and the possibility of problems will decrease if the product is cleaned at regular intervals.

Risk of electric shock!
Switch off the electricity before cleaning appliance to avoid possibility of an electric shock.

Hot surfaces may cause burns!
Allow the appliance to cool down before you clean it.

- Clean the product thoroughly after each use. This way it will be possible to remove cooking residues more easily and will avoid burning them on the next time the appliance is used.
- No special cleaning agents are required for cleaning the product. Use warm water with washing liquid, a soft cloth or sponge to clean the product and wipe with a dry cloth.
- Always ensure any excess liquid is thoroughly wiped off after cleaning and any spillage is immediately wiped dry.
- Do not use cleaning agents that contain acid or chloride to clean the stainless steel surfaces and the handle. Use a soft cloth with a liquid detergent (not abrasive) to wipe those parts clean, paying attention to sweep in a horizontal direction.

The surface may be damaged by some detergents or cleaning materials.

Do not use aggressive detergents, cleaning powder/ cream or any sharp objects.

Do not use steam cleaners for cleaning.

Cleaning the control panel

Clean the control panel and control knobs with a damp cloth and wipe them dry.

Do not remove the control knobs for control panel cleaning.

Cleaning oven door

Don't use any harsh abrasive cleaners or sharp metal scrapers for cleaning the oven door. They could scratch the surface and damage the glass.

Removal of the oven door

1. Open the door.
2. Unlock the clips at the hinge housing on the right and left hand sides of the door by pressing them down as illustrated in the diagram.

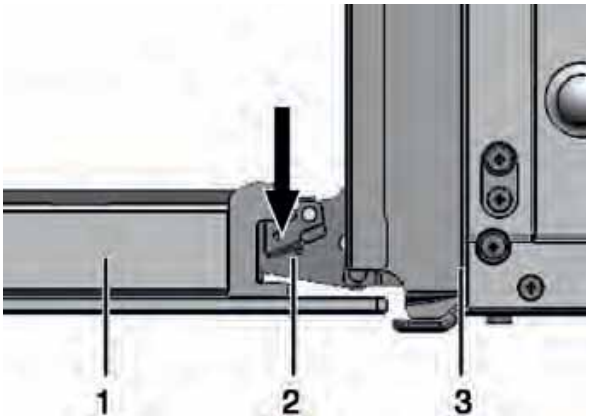

1. Door door
2. Hinge
3. Oven

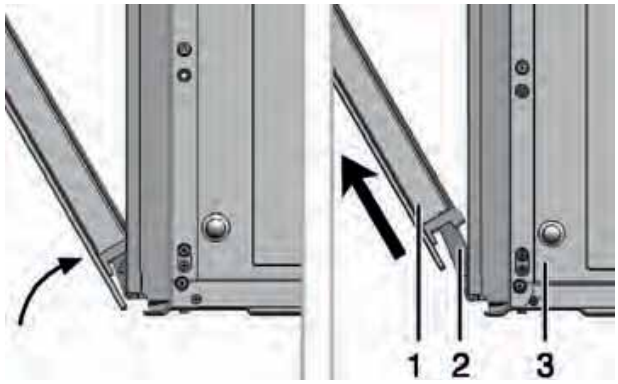

4. Raise the door to the half-way position.
5. Remove the door by pulling it up-wards to slide it from the hinges.

Steps carried out during removing process should be performed in reverse order to reattach the door.

Do not forget to close the clips at the hinge housing when reinstalling the door.

Downloaded from www.Manualslib.com manuals search engine

Removing the inner door glass

The inner glass panel of the oven door can be removed for cleaning.

When cleaning, avoid the use any harsh abrasive chemicals or sharp metal scrapers for as this could scratch the surface and damage the glass.

In order to do this:

1. open the door fully.

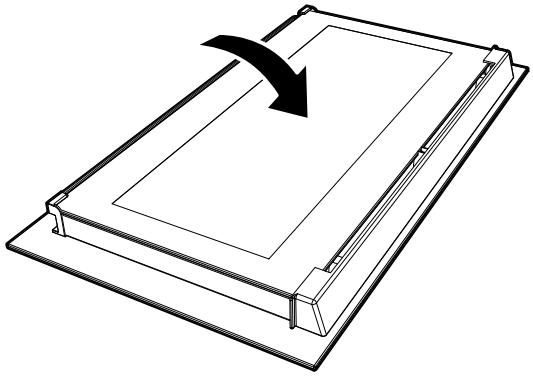

2. The top plastic cap can be pulled away from the retaining clips.

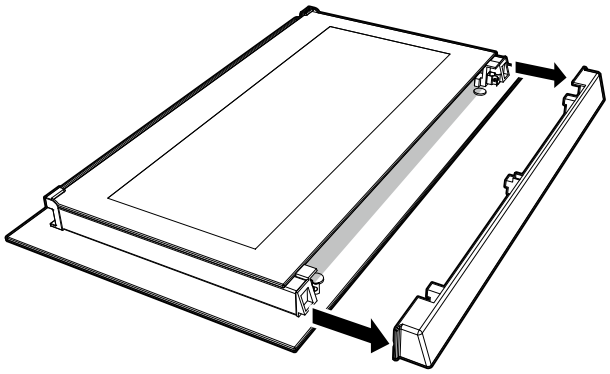

3. The inner glass can then be lifted from its retaining slots.

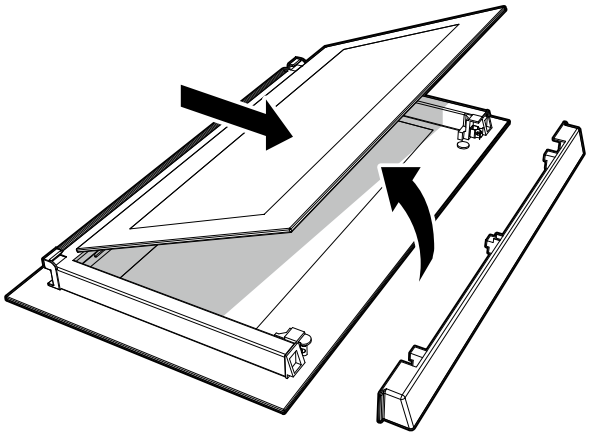

4. To replace the glass follow this process in reverse ensuring the printed surface of the glass is facing downwards.

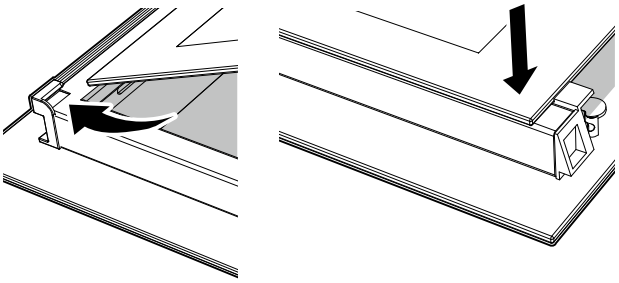

Ensure the glass is fully located in the lower retaining slots before attempting to re-fit the top cap.

Downloaded from www.Manualslib.com manuals search engine

Replacing the oven lamp

Hot surfaces may cause burns!
Make sure that the appliance is switched off and cooled down in order to avoid the risk of an electrical shock or burns.

The oven lamp is a special electric lamp that can resist up to 300°C. See Technical specifications, for details.

Position of lamp might vary from the diagram.

1. Disconnect the product from mains.
2. Turn the glass cover counter clock-wise to remove it.
3. Remove the oven lamp by turning it counter clockwise and replace it with the new one.
4. Install the glass cover

Downloaded from www.Manualslib.com manuals search engine

10 - Installation

Before installation

The product should only be installed by suitably qualified persons.

The product must be installed in accordance with all local regulations.

Prior to installation, visually check the product for any damage/defects. Do not install if any issues are found.

Damaged products may cause risks to your own safety.

The appliance is intended for installation in Howdens kitchen cabinets.

- Surfaces, synthetic laminates and adhesives used must be heat resistant.
- Kitchen cabinets must be set level and fixed.
- If there is a drawer beneath the oven, a shelf must be installed between oven and drawer.
- The following installation drawings are representational and may not match exactly with your appliance.

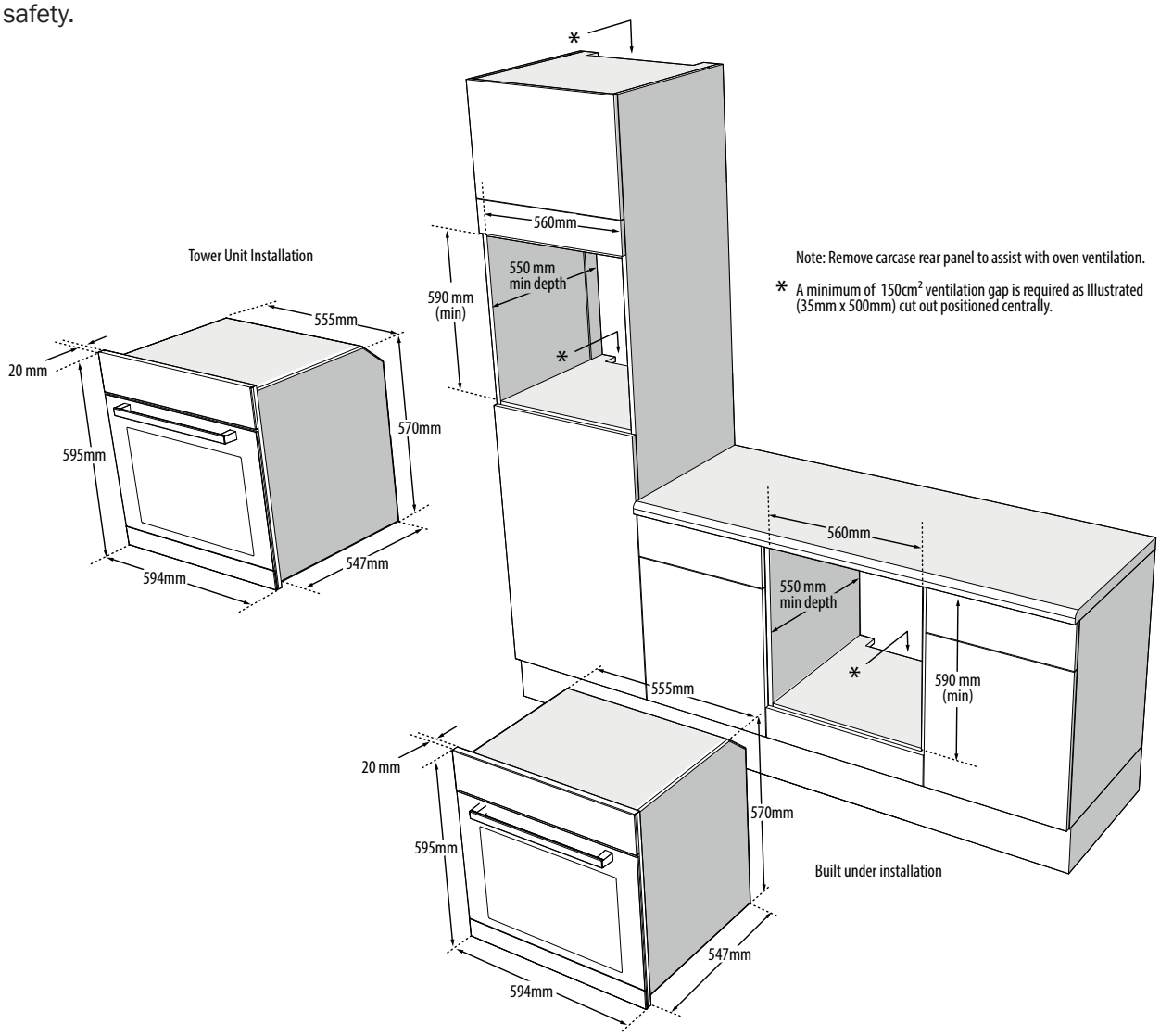

Downloaded from www.Manualslib.com manuals search engine

Installation and connection

Material damage!

The door and/or handle must not be used for lifting or moving the appliance.

- We recommend 2 people handling of the product.
- Use the handle slots located at both sides of the oven to move the appliance.

Connection to the mains supply

This appliance must be earthed!

Howdens shall not be held responsible for any damage caused by using the appliance without an earthed connection.

Risk of electric shock, short circuit or fire by unprofessional installation!

The appliance may be connected to the mains supply only by an authorized qualified person and the appliance is only guaranteed after correct installation.

Risk of electric shock, short circuit or fire by damage of the mains lead!

The mains lead must not be clamped, bent, trapped or come into contact with hot parts of the appliance.

If the mains lead is damaged, it must be replaced by a qualified person.

- The mains supply must correspond to the data specified on the rating plate of the appliance.to The rating plate can be seen when the main oven door is opened.
- The appliance mains cable must correspond the specifications and the power consumption; see Technical specifications, page.

Risk of electric shock Before starting any work on the electrical installation, please disconnect the mains supply.

1. This appliance must only be installed by a qualified electrician, e.g. a local electricity company or a NICEIC registered contractor, to a suitable double-pole control unit with a minimum contact clearance of 3 mm in all poles. the work should be carried out in accordance with IEE regulations. Failure to observe this instruction may result in operational problems and invalidation of the appliance Guarantee.

Additional protection by a residual current circuit breaker is recommended.

2. Open the terminal block cover with screwdriver.

3. Pass the mains lead through the cable clamp under the terminal and fix the mains lead to main body with supplied screw via cable grip.

4. Connect the cables according to the supplied diagram.

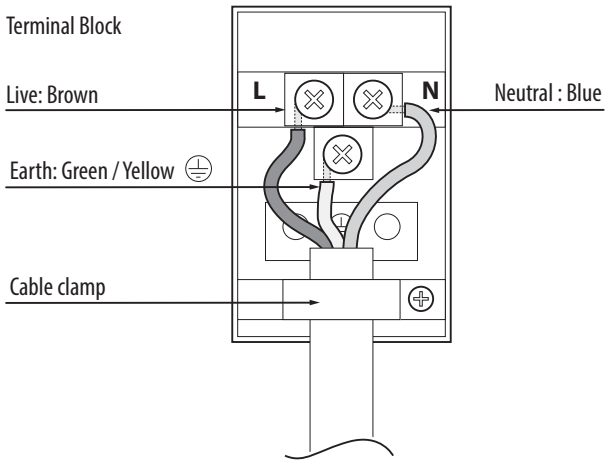

5. Close the cover of the terminal block once the wiring is complete. Mains cable must not be longer than 2 metres for safety reasons.

6. The mains lead should be routed away from the appliance and not be trapped between the appliance and the wall.

Downloaded from www.Manualslib.com manuals search engine

Installation
Slide the oven through the cabinet aperture, align and secure.

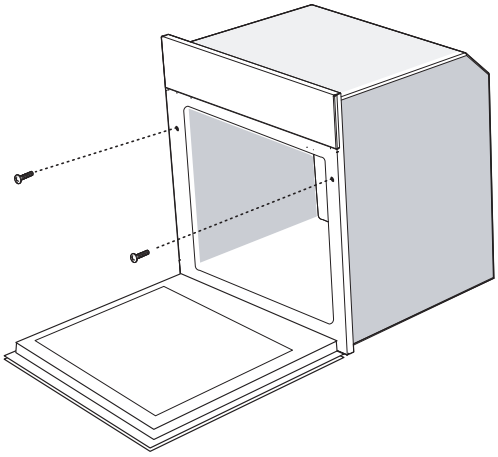

Fix your oven with the 2 screws and washers as indicated in the illustration.

Final check
Connect the appliance to the mains supply, switch on the mains supply and check the oven's functions,

Cooling fan

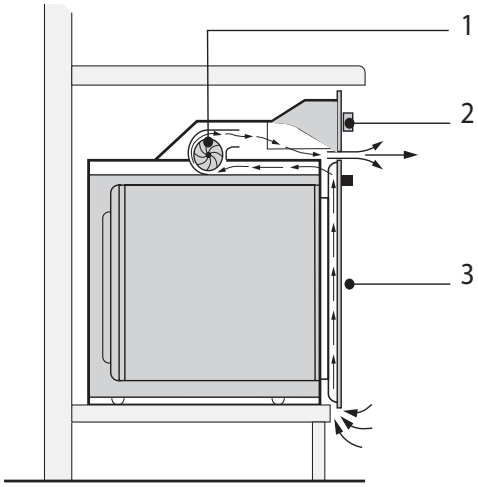

1	Fan
2	Control panel
3	Door

The Built-in cooling fan cools both the front of the appliance and cabinetry.

Do not switch the oven off at the mains isolation switch immediately after cooking. Cooling fan continues to run for up to 20-30 minutes (approx) even after the oven control is turned off.

Downloaded from www.Manualslib.com manuals search engine

11 - Technical specification

TECHNICAL INFORMATION	
General	
Voltage / Frequency	220-240 V ~ 50 Hz
Total power consumption	2.3kW
Fuse	min. 13 A
Cable length	max. 2 m
Cable type / section	H05VV-FG 2.5mm², 3 core or equivalent
Oven / Grill	
External dimensions (height / width / depth)	595 mm/594 mm/570mm
Installation dimensions (height / width / depth)	590 mm/560 mm/min. 550 mm

Main oven	Fan Oven / Grill
Energy efficiency class#	A
Power consumption	0.79Kw/h
Inner lamp	240 V/15-25 W/E14 SES/T 300 °C
Grill power consumption	2.2kW

Basics: Information on the energy label of electrical ovens is given in accordance with the EN 60350-1 / IEC 60350-1 standard. Those values are determined under standard load with bottom-top heater or fan assisted heating (if any) functions.

Energy efficiency class is determined in accordance with the following prioritization depending on whether the relevant functions exist on the product or not. 1-Cooking with eco-fan, 2- Turbo slow cooking, 3- Turbo cooking, 4- Fan assisted bottom/top heating, 5-Top and bottom heating.
** See. Installation section.

- Technical specifications may be changed without prior notice to improve the quality of the product.
- Figures in this manual are schematic and may not exactly match your product.
- Values stated on the product labels or in the documentation accompanying it are obtained in laboratory conditions in accordance with relevant standards. Depending on operational and environmental conditions of the product, these values may vary.

Downloaded from www.Manualslib.com manuals search engine

12 - Troubleshooting

TROUBLESHOOTING GUIDE		
Symptoms	Possible Cause	Solutions
Oven emits steam when it is in use.	• Food is being cooked with a high water content	It is normal that steam escapes from food during cooking. This is not a fault.
Product emits metal noises while heating and cooling.	• When the oven cavity heats up or cools down parts will expand and contract.	This is quite normal and the oven is designed to accommodate such movement (this is not a fault).
Product does not operate	• The mains fuse maybe defective or has tripped	Check fuses in the fuse box. If necessary, replace or reset them.
	• Product is not connected properly.	Check all power connections.
Oven light does not work.	• Oven bulb is defective	Replace oven bulb
	• Power is cut.	Check if there is power. Check the fuses in the fuse box. If necessary, replace or reset the fuses.
Oven does not heat.	• Function and/or Temperature are not set.	Set the function and the temperature with the Function and/or Temperature knob/key.
	• The timer is not adjusted correctly	Reset the oven timer.
	• Power is cut.	Check if there is power. Check the fuses in the fuse box. If necessary, replace or reset the fuses.

If you cannot eliminate the problem after following the instructions in this section, consult your depot or the Authorized Service Agent. Never try to repair a nonfunctional product yourself.

Downloaded from www.Manualslib.com manuals search engine

13 - Your guarantee

Product Guarantee Details (UK only)

Your appliance has the benefit of a comprehensive manufacturer's guarantee which covers the cost of breakdown repairs. (Details of which are shown on your Proof of Purchase Document).

- Any claim during the period of the guarantee (MUST BE ACCOMPANIED BY THE PROOF OF PURCHASE)
- The product must be correctly installed and operated in accordance with the manufacturer's instructions and used for normal domestic purposes.
- This guarantee does not cover accidental damage, misuse or alternations which are likely to affect the product.
- The guarantee is invalid if the product is tampered with, or repaired by any unauthorised person.

(The guarantee in no way affects your statutory or legal rights)

What to do if you need to report a problem-

Please ensure you have ready:

- **The product's model & serial numbers**
- **Howdens Proof of Purchase document**
- **Your full contact details**

Call the Service Line on 0845 00 60 006

Downloaded from www.Manualslib.com manuals search engine

Notes

Downloaded from www.Manualslib.com manuals search engine

Product Information

Commission Regulation (EU) No 66/2014

LAMONA

Model	LAM3400/2/3
Type of Oven	Fan
M	31.5kg
Number of cavities	1
V	65L
$EC_{electric\ cavity}$	0.79kWh/cycle
EEI_{cavity}	56

Downloaded from www.Manualslib.com manuals search engine

ISSUE V5 04-02-15

If supplied, please stick your self adhesive product rating plate here, or make a note of the product serial number below in the box below for future reference.

Serial Number : .....

HOWDENS JOINERY CO. | MAKING SPACE MORE VALUABLE

MIX
Paper from responsible sources
FSC® C081735
This brochure is printed on FSC certified paper

Downloaded from www.Manualslib.com manuals search engine